MEIKE®

50mm F1.4 STM MIX

自 动 对 焦 镜 头

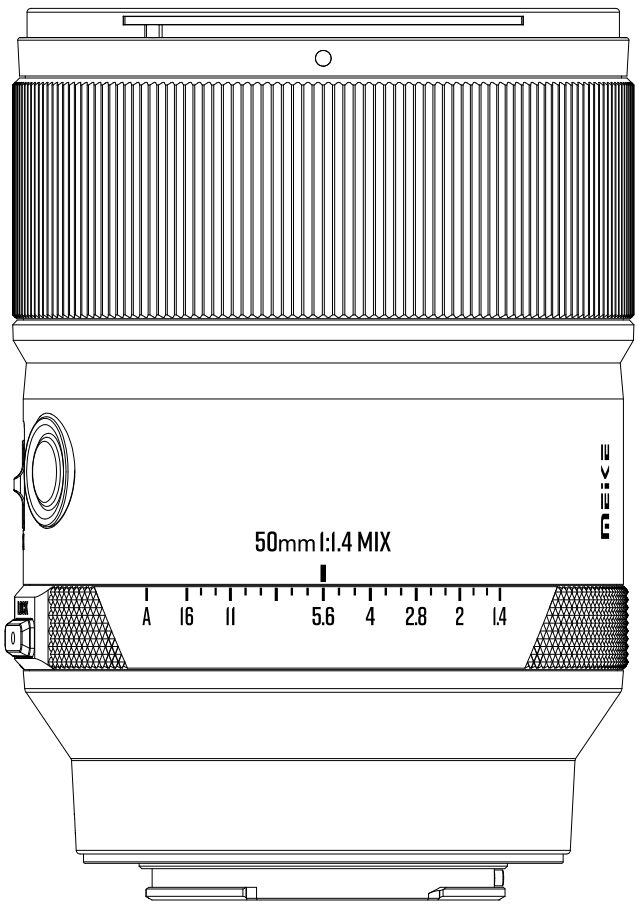

用户使用手册

USER MANUAL

生产商:成都威正数码科技有限公司 Tel:+86-755-82328117 ext837
地址:四川省成都市新都区工业东区创业路69号 Email:info@apex-ce.com www.mkgrip.com



50mm F1.4 STM MIX 是一款拥有高分辨率的人像拍摄镜头，该镜头能在焦内实现高分辨率成像，焦外实现柔美背景虚化，为日常拍摄提供清晰的影像。而且携带便利，影像在任何光圈下都表现十分优秀。

50mm F1.4 STM MIX 采用全新的光学结构，实现人像F1.4的大光圈。镜片双面使用多层镀膜技术，还原更真实的色彩,前镜片与后镜片采用防指纹防油污镀膜，不易沾染灰尘与污渍，日常清洁维护更加轻松。

在使用本镜头前，详细阅读本说明书，使您对镜头更熟悉并正确掌握操作方法。

01 目录

目　　录 01
注意事项 02
部件名称 03
安装和拆卸 04
遮光罩使用 05
对焦开关与按钮 06
光圈调节环 07
在线升级 08
镜头保养 09
产品规格 10
产品标配 11

简体中文

02 注意事项

- 请勿自行拆卸或修理镜头，触碰镜头内部可能导致镜头内部受损。
- 请勿通过镜头观看太阳或明亮光源，可能会导致永久性视力损伤。
- 使用镜头时，请勿手拿遮光罩，以免镜头意外跌落。
- 严禁使用稀释剂或苯等活性试剂清洗镜头。
- 请勿将镜头放置于高温、炎热的地方，如阳光直射的汽车内;使用中的火炉旁等;这将会使部分零部件受损或变形。

MADE IN CHINA

03 部件名称

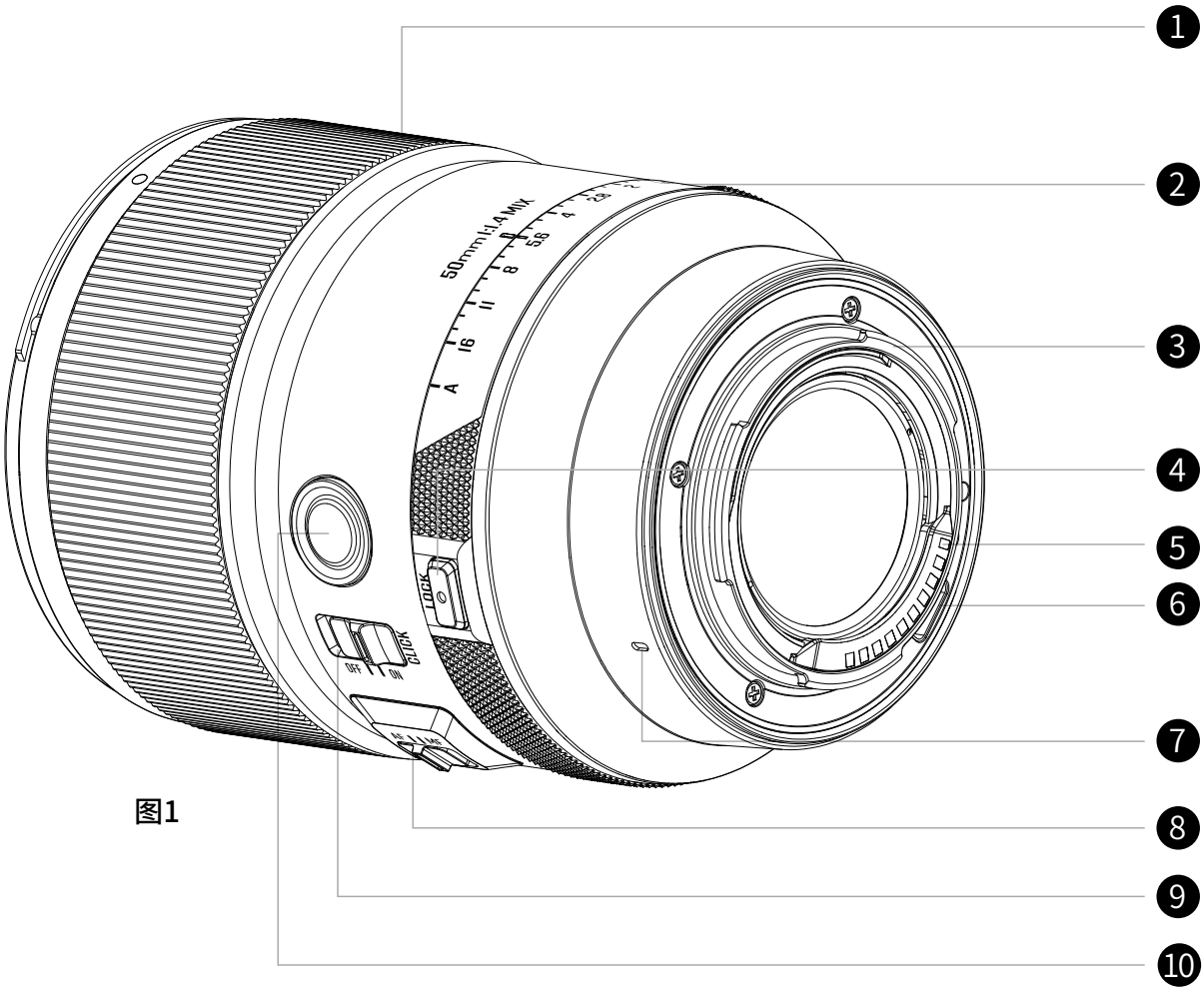

图1

❶ 对焦调节环

❷ 光圈调节环

❸ 镜头卡口

❹ 光圈锁

❺ 镜头通讯触点

❻ 固件升级端口(Type-C)

❼ 镜头安装对位标识点

❽ 对焦控制选择开关

❾ 无极光圈开关

❿ 对焦控制按钮

MADE IN CHINA

04 镜头安装和拆卸

镜头安装:将镜头上的安装标记对准相机上的安装标记,然后顺时针轻轻旋转,直到听到“咔哒”一声,表示镜头安装完成。**(如下图2)**

镜头拆卸:按下相机镜头释放按钮,然后将镜头逆时针轻轻旋转取出。**(如下图3)**

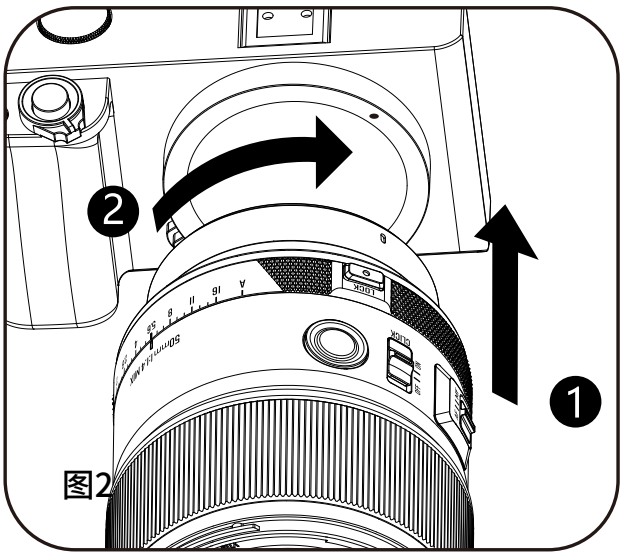

图2

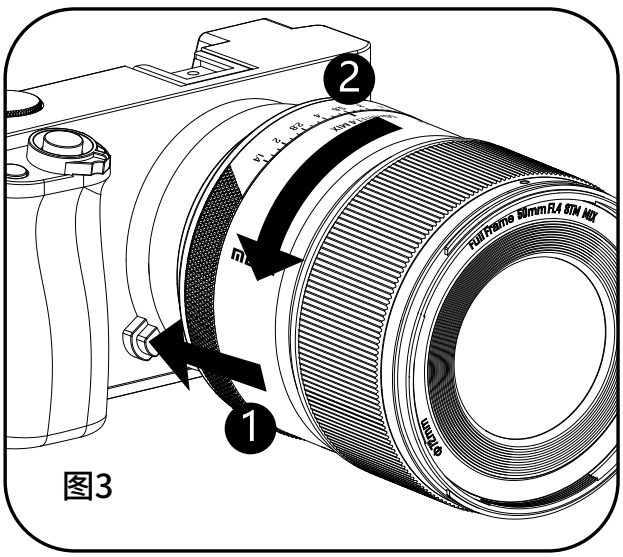

图3

·TIPS

卸下镜头后,请将镜头后端朝上放置,以避免划伤镜头表面和电子触点。

如果电子触点表面被弄脏,划伤或沾有指纹,可能会导致腐蚀或接触不良。相机和镜头可能无法正常工作,请用柔软的布将其擦净。

MADE IN CHINA

05 遮光罩使用

附配的遮光罩有效消除杂光和逆光的干扰，并能保护镜头，避免受到雨、雪、灰尘的干扰。

安装遮光罩

将遮光罩安装标识(◄IN•OUT►)对齐镜头遮光罩安装标识(●),装入镜头。

顺时针转动遮光罩，直至遮光罩锁定标识(●)，对齐镜头遮光罩安装标识(●)，并发出咔哒一声，遮光罩固定。**(图4)**

反向安装遮光罩

将遮光罩锁定标识(●)对齐镜头遮光罩安装标识(●)，装入镜头。

顺时针转动遮光罩90°，并发出咔哒一声，遮光罩固定。**(图5)**

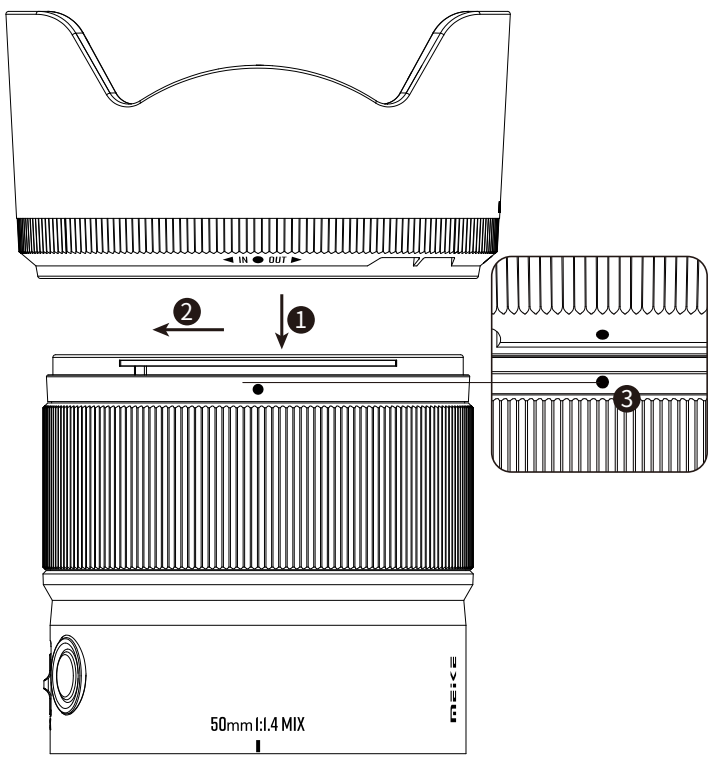

图4

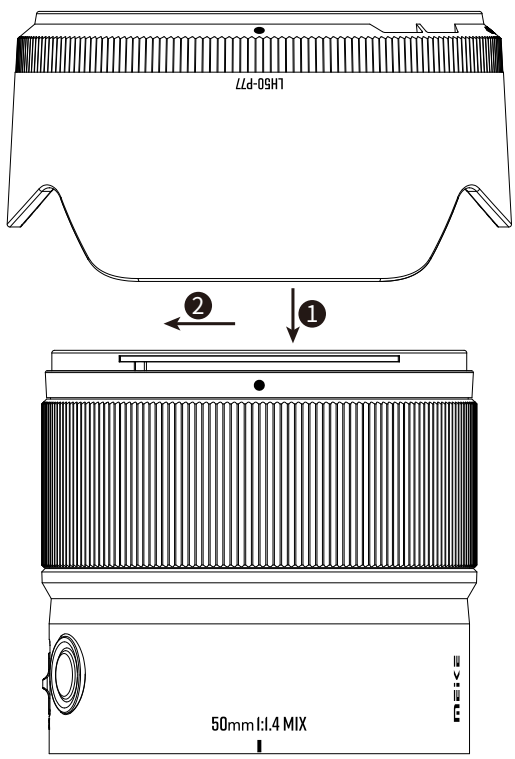

图5

- 如果遮光罩安装不当，可能会导致挡住部分图像。
- 安装或者拆卸遮光罩时，请握住遮光罩底部旋转，为防止遮光罩变形，不要抓住它的边缘部分旋转。
- 可以将遮光罩反向安装在镜头上，以便存放。

MADE IN CHINA

06 对焦开关与按钮

对焦模式选择:需要使用自动对焦模式(AF)进行拍摄，请将对焦模式开关调到AF位置。需要使用手动对焦模式(MF)进行拍摄，请将对焦模式开关调到MF位置。(图6)

Fn自定义按键:根据相机型号可映射对应功能。

EFR卡口镜头: Fn自定义按键仅支持对焦锁定。

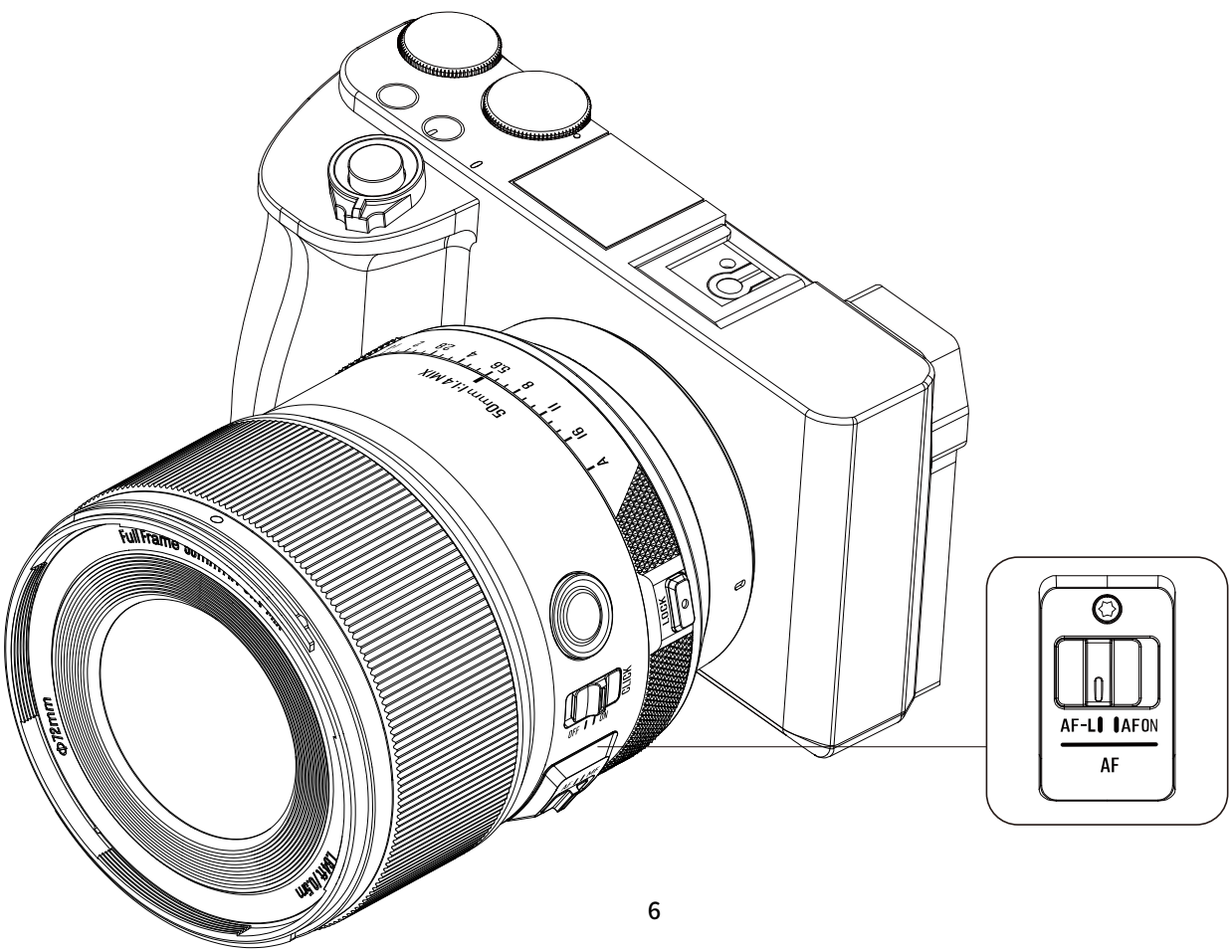

6

MADE IN CHINA

07 光圈环调节

◆ 手动光圈:转动光圈调节环可手动设置F1.4-F16光圈,转到档位A时光圈切换为相机控制。(图7)

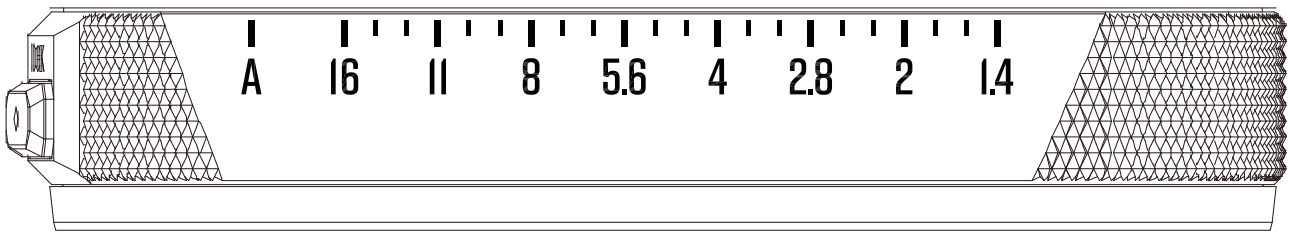

图7

·TIPS

尼康Z卡口相机在使用S、P和自动档位拍摄时,请将镜头手动光圈环调节至A处!
EFR卡口相机使用景深预览等功能,请将镜头手动光圈环调节至A处!

08 在线升级

您可在官网www.mkgrip.com在线下载最新固件。

固件更新步骤:

◆ 在官网下载或向客服索要镜头最新升级固件。

◆ 将下载的升级固件压缩包解压,解压后的升级文件如下例示;
例:“50mm F1.4 STM MIX_*_***"

MADE IN CHINA

- 用Type-C USB数据线将镜头连接电脑，直到电脑上出现可移动磁盘。
- 将解压后升级文件复制到可移动磁盘里，此时升级等待约20秒左右，当复制的进度条完成后即完成升级。
- 可移动磁盘里面的“ver***.txt”文件,文件名中的***为镜头当前固件版本号。

09 镜头保养

- 避免接触镜头的镜片表面，当长时间不使用镜头，请将镜头存放在阴凉干燥的地方以防止发霉和生锈。也不可将樟脑丸、化学物质等一起存放。
- 镜头安装一个UV镜或专用前部保护镜,这种镜片除了能过滤紫外线以外，还能避免灰尘直接落在镜头表面，同时防止意外磕碰。
- 镜头表面有灰尘，可配合镜头笔和气吹清理镜头上的灰尘。
- 镜头上安装遮光罩，遮光罩不仅可以防止在拍摄的过程中带入太多对画质有害的光线和紫外线，而且还可以对镜头起到一定的保护作用，譬如在发生碰摔或意外掉落时，有一定概率保护镜头不会受到太大的撞击。
- 镜头清洁纸或者镜头清洁布，蘸少许的乙醇或者镜头清洁剂，以圆周运动的方式，从中心到边缘进行清洁指纹和污渍。
- 镜头与相机的通讯触点尽可能避免直接触碰，因灰尘、污垢均有可能造成镜头和相机的通讯连接故障。
- 本镜头未设计防水功能，下雨天或接近水源使用时需要防止镜头

MADE IN CHINA

进水。镜头内部进水会导致电子元器件受损，可能无法维修。

- 当在温差骤变环境中使用您的摄影器材(相机与镜头)时，应在一段时间内把它暂存在盒内或塑料袋中，以便设备的温度能经历渐变的过程，这样可减少因温差而造成设备故障。

10 产品规格

使用画幅	全画幅		
光圈范围	F1.4-F16		
最小对焦距离	0.5m		
镜头焦距	50mm		
镜片结构	10组16片(包括一片非球面)		
滤镜尺寸	ϕ 72mm		
镜头直径	ϕ 79mm		
全画幅 视角范围	对角线	水平方向	垂直方向
	47.1°	40.2°	27.5°
APS-C 视角范围	对角线	水平方向	垂直方向
	32.7°	27.5°	18.5°

※ 以上数据是根据公司测量条件得出的，设计或规格如有变更，恕不另行通知。

11 产品标配

镜头	x1	遮光罩	x1
前镜头盖	x1	后镜头盖	x1

MADE IN CHINA

MEIKE®

50mm F1.4 STM MIX

Autofocus Lens

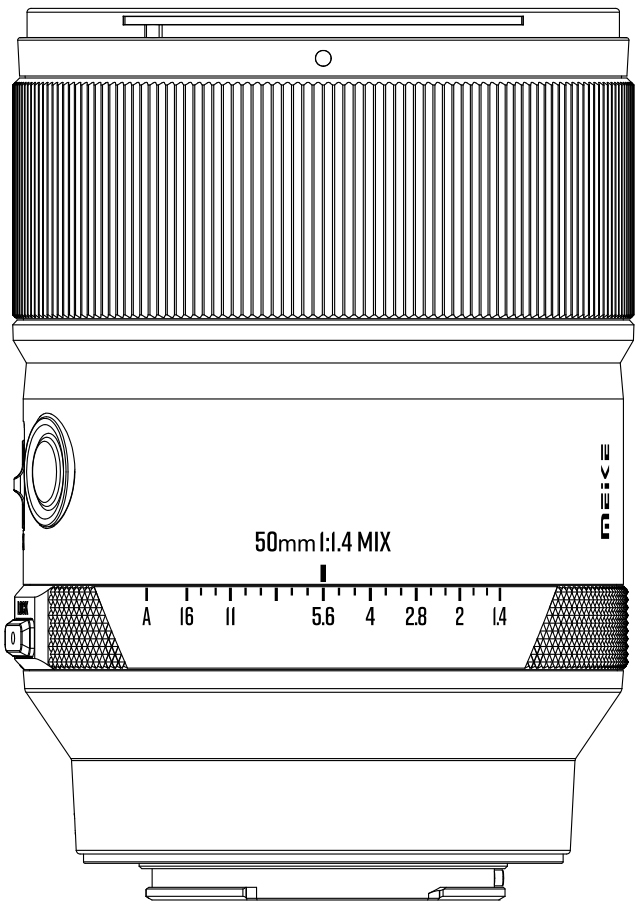

USER MANUAL

Chengdu Weizheng Digital Technology Co., Ltd
ADD : No. 69 Chuangye Road, Xindu District, Chengdu, Sichuan, China
Tel:+86-755-82328117
Email:info@apex-ce.com
www.mkgrip.com



50mm F1.4 STM MIX is a portrait lens with high resolution. It delivers high-resolution imaging in the in-focal plane focus areas while producing soft, beautiful background bokeh, providing clear images for everyday shooting. Portable and convenient, it performs excellently at all apertures.

The 50mm F1.4 STM MIX adopts a new optical structure to achieve a large F1.4 aperture for portrait photography.The lenses feature multi-layer coating technology on both sides to reproduce more true-to-life colors. The front and rear lenses are coated with fingerprint-and oil-resistant coatings, making them less prone to dust and smudges and easier to clean and maintain on a daily basis.

Before using this lens, please read this manual carefully to becomefamiliar with the lens and master the correct operating methods. Be sure

01 TABLE OF CONTENTS

Table of Contents 01

Attention 02

Parts Names 03

Installation and Removal 04

Using the Lens Hood 05

Focus Switches and Buttons 06

Aperture Adjustment Ring 07

Online Upgrade 08

Lens Maintenance 09

Product Specifications 10

Standard Accessories 11

ENGLISH

02 ATTENTION

- Do not disassemble or repair the lens by yourself. Touching the insideof the lens may result in damage to the interior of the lens.
- Do not look at the sun or other bright light sources through the lens.
- When using the lens, do not hold the lens hood to avoid the accidental drop ofthe lens.
- Do not clean the lens with thinner, benzene or any other organic solvents such as thinner or benzene.
- Do not leave the lens in hot places, such as in a car with direct sunlight,which will damage or deform the plastic parts.

MADE IN CHINA

03 PART NAME

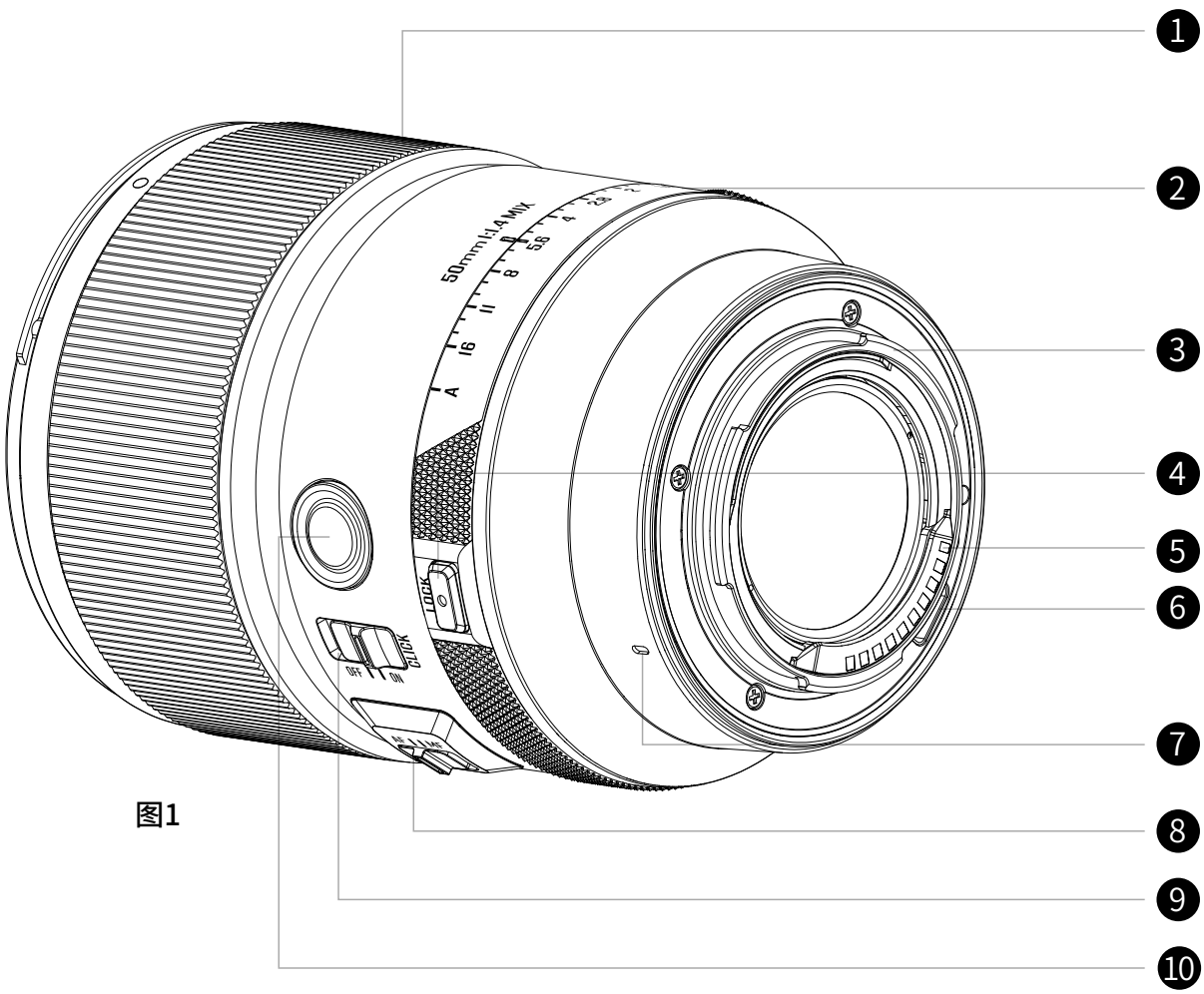

图1

1. Focus ring
2. Manual Aperture Control Ring
3. Lens mount
4. Aperture Lock
5. Lens Electronic contacts
6. Firmware upgradeport (Type-C)
7. Lens installation Align mark
8. AF/MF Focus Mode switch
9. Manual aperturestepped/ stepless switch
10. Fn custom button

ENGLISH

MADE IN CHINA

04 LENS INSTALLATION AND REMOVAL

Lens installation: Align the lens mounting mark on the lens with the lensmounting mark on the camera then rotate lightly, the installation would bedone afteryou hear the 'click' sound. (Fig. 2)

Lens disassembly: Press the release button on camera and then rotate the lens gently to remove it. (Fig. 3)

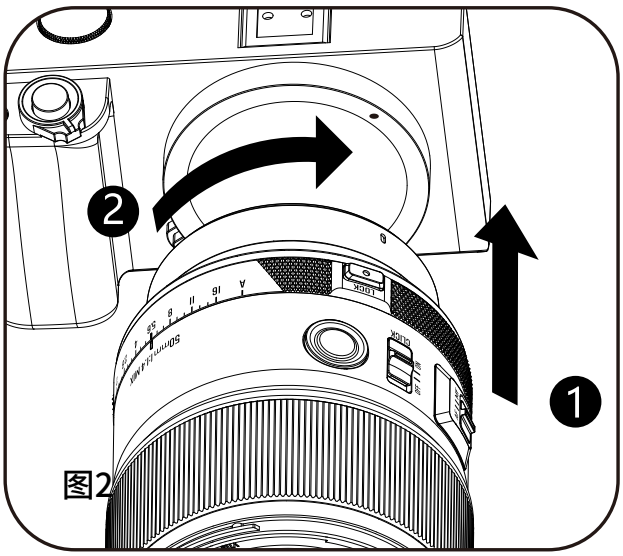

图2

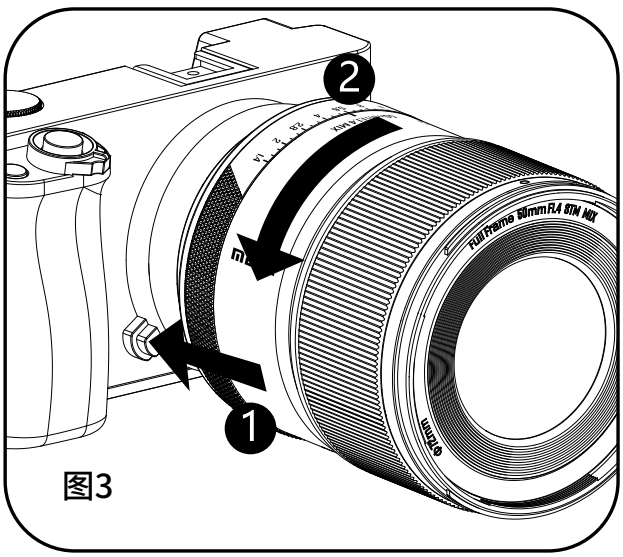

图3

·TIPS

After removing the lens, place the rear end of the lens facing upwards toavoid scratching the surface of the lens and electronic contacts.

If the surface of the electronic contact is stained, scratched or stained withfingerprints, it may cause corrosion or poor contact. The camera and thelens may not work properly, please wipe them with a soft cloth.

ENGLISH

MADE IN CHINA

05 LENS HOOD INSTALLATION

The included lens hood effectively eliminates interference from stray light and backlight, and protects the lens from rain, snow and dust.

To attach the lens hood:

Align the mounting mark (◂IN•OUT▸) on the lens hood with the lens hood mounting mark (●) on the lens, then attach it to the lens.

Rotate the lens hood clockwise until the lens hood lock mark (●) aligns with the lens hood mounting mark (●), and a click is heard. The lens hood is secured.(Fig. 4)

To reverse-mount the lens hood:

1 Align the locking mark (●) on the lens hood with the lens hood mounting mark (●)on the lens, then attach it to the lens.

Rotate the lens hood clockwise 90° until a click is heard, indicating the hood is secured. (Fig. 5)

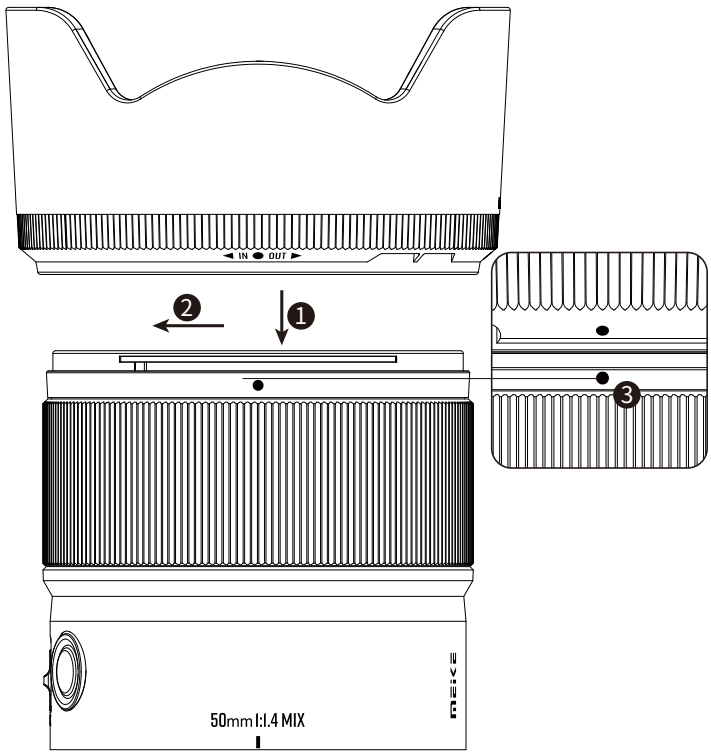

图4

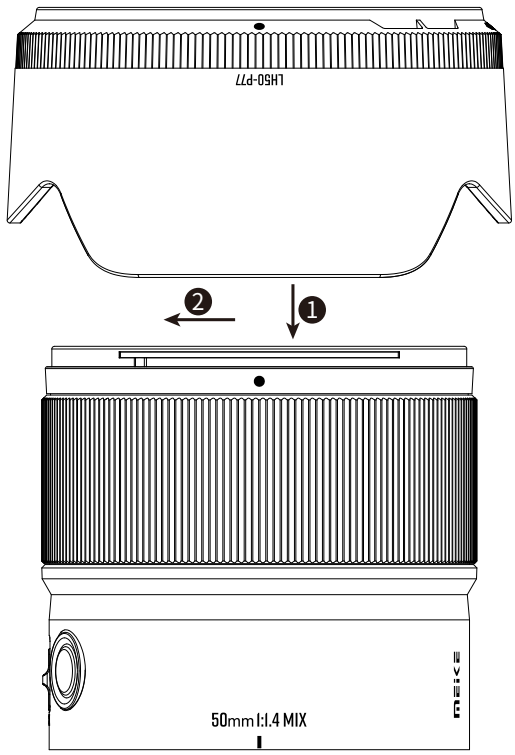

图5

- Improper installation of the lens hood may cause vignetting or block part of the image frame.
- When attaching or detaching the lens hood, hold the base of the hood to rotate it. To avoid deforming the hood, do not rotate it by holding its edge.
- The lens hood can be reverse-mounted on the lens for convenient storage.

ENGLISH

MADE IN CHINA

06 AF/MF FOCUS MODE SWITCH AND CUSTOM BUTTON

Focus Mode Selection: To shoot in Autofocus (AF) mode, set the focusmode switch to the AF position. To shoot in Manual Focus (MF) mode, setthe focus mode switch to the MF position. (Picture 5)

Fn custom button: Supports mapping of corresponding functions depend ing on the camera model.

EFR mount lens: The Fn custom button only supports focus lock.

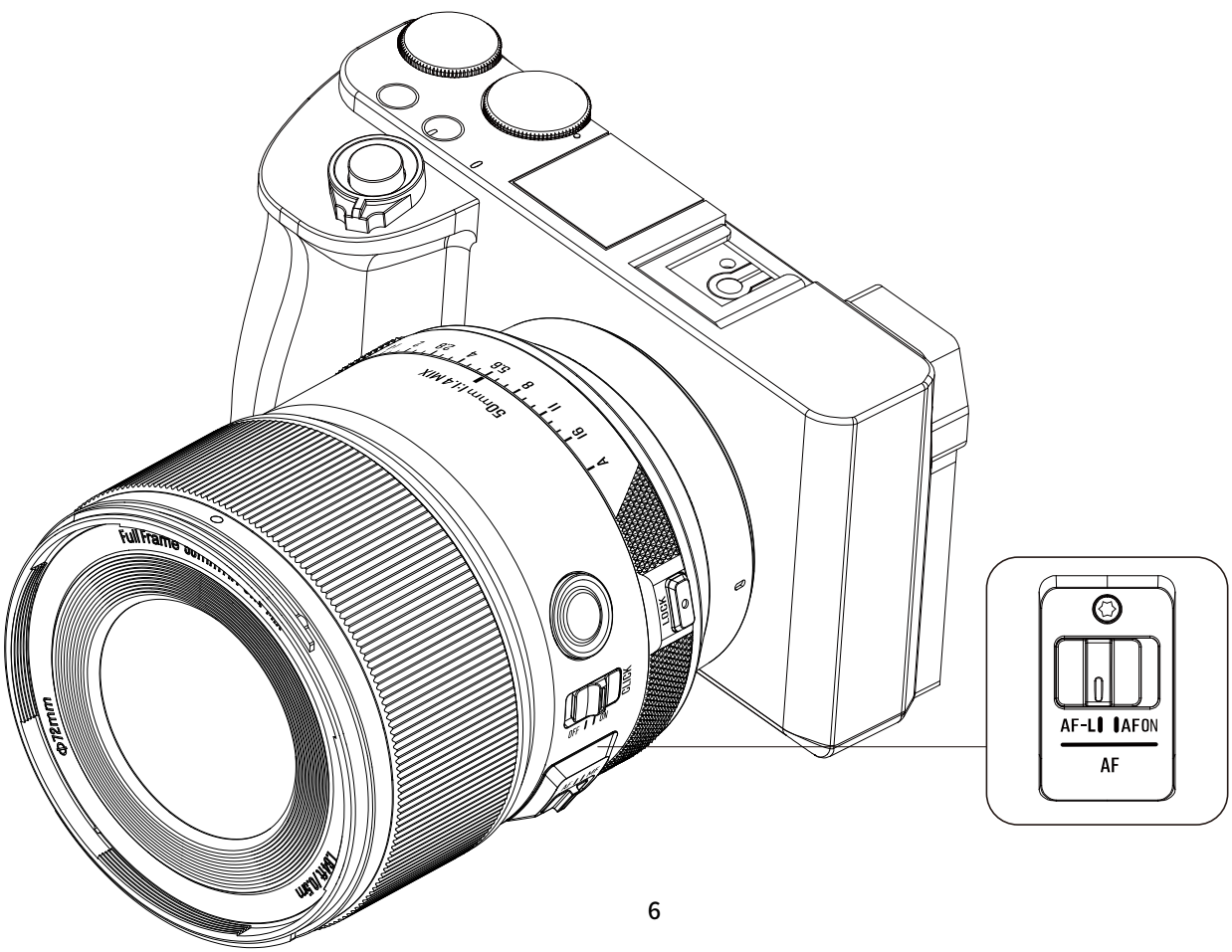

6

MADE IN CHINA

07 APERTURE RING

ManualAperture: Rotate the aperture adjustmentring to manually set theaperture from F1.4 to F16. Switch the ring to gear A to enablecamera-con-trolled aperture. (Figure 7)

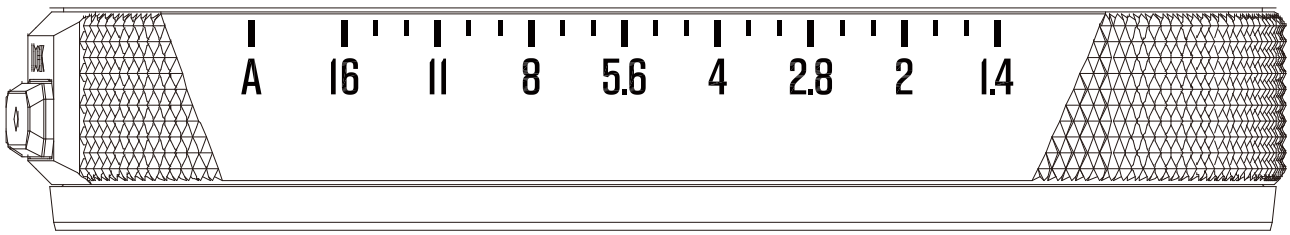

7

·TIPS

For Nikon Z-mount cameras, set the lens manual aperture ring to position Awhen shooting in S, Pand auto modes.

For EFR-mount cameras, set the lens manual aperture ring to position Ato use functions such as depth-of-field preview.

08 FIRMWARE UPDATE

You can download the latest firmware online from the official website:www.mkgrip.com

Firmware update steps:

1. Download the latest lens firmware update from the official website or requestitfrom customer service.

2. Extract the downloaded firmware update zip package. The extracted updatefile will appear as shown in the example: e.g., "50mm F1.4 STM MIX_*_***"

3. Connect the lens to your computer using a Type-C USB cable until a

MADE IN CHINA

removable disk appears on the computer.

4. Copy the extracted update file to the removable disk. The update process will take approximately 20 seconds. The update is complete when the copying progress bar finishes.

5. In the "ver***.txt" file located on the removable disk, the *** in the file name indicates the current firmware version number of the lens.

09 LENS CARE AND STORAGE

- Avoid touching the lens surface. When the lens is not in use for an extended period, store it in a cool, dry place to prevent mold and rust.Do not store it with mothballs, chemicals or similar substances.
- Fit the lens with a UV filter or dedicated front protective filter. In addition to blocking ultraviolet rays, this filter keeps dust from settling directly on the lens surface and guards against accidental bumps.
- To remove dust from the lens surface, use a lens pen and air blower for cleaning.
- Attach a lens hood to the lens. It not only blocks excessive harmful light and UV rays that degrade image quality during shooting, but also provides a degree of physical protection - in the event of a knock or accidental drop, it may help reduce impact damage to the lens.
- Dampen a lens cleaning tissue or lens cloth with a small amount of ethanol or lens cleaner, then wipe fingerprints and smudges in circular motions from the center outward.
- Avoid direct contact with the electrical contacts between the lens andcamera whenever possible, as dust and dirt may cause communication malfunctions.
- This lens is not designed to be waterproof. Prevent water from entering the lens when using it on rainy days or near water sources.

MADE IN CHINA

Internal water damage can destroy electronic components and may be irreparable.

◆ When using your photographic equipment (camera and lens) in environments with sudden temperature changes, temporarily store it in its case or a plastic bag to allow gradual temperature acclimatization.This helps reduce equipment malfunctions caused by to prevent condensation from forming inside the eguipment

10 SPECIFICATION

Format	Full Frame		
Aperture Range	F1.4-F16		
Minimum Focusing Distance	0.5m		
Focal Length	50mm		
Lens Structure	10 groups, 16 elements (including 1 asphericalelement)		
Filter Size	ϕ 72mm		
Outer Diameter	ϕ 79mm		
MFT Angle of View	Diagonal	Horizontal	Vertical
	47.1°	40.2°	27.5°
APS-C Angle of View	Diagonal	Horizontal	Vertical
	32.7°	27.5°	18.5°

※ The above data are based on our company' s test.Product specifications and appearance are subject to change without notice.

11 PACKAGE CONTENTS

Lens x1

Front lens cap x1

Lens hood x1

Rear lens cap x1

MADE IN CHINA

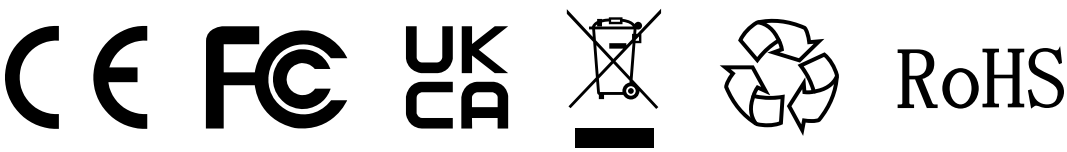

Made in China